Gravity Feed Commercial

BBQ Smoker

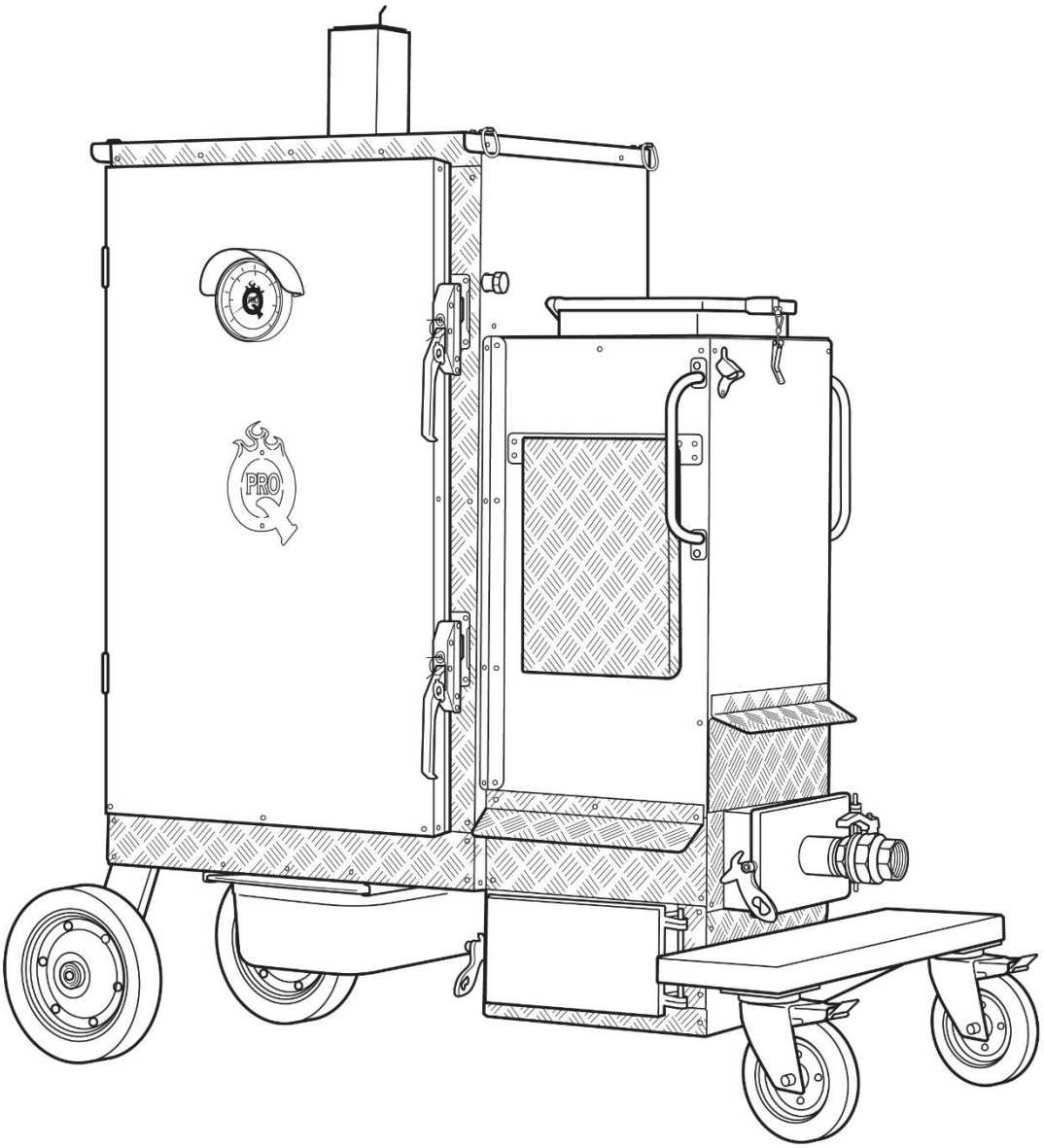

User Manual

©2016 Mac's BBQ Ltd

Congratulations on the purchase of your new ProQ® Gravity Feed BBQ Smoker! The following guide will show you the basics on how to use, care, and maintain your new ProQ® smoker. ***Please read the entire manual, including safety guides below, before operating your new smoker.***

Safety Instructions

Please read and follow these instructions before using your smoker, failure to do so may result in serious injury, death or a fire.

- Your ProQ® Gravity Feed Cabinet BBQ Smoker is designed for outdoor use, however it may be used with commercial grade extraction/HVAC indoors (please seek professional advice regarding this type of installation).
- Only use this smoker on a hard, level and non-combustible surface.
- Do not leave the smoker unattended and keep children and pets away from the unit at all times.
- Make sure there is at least 10' clearance between the unit and any combustible materials such as bushes, trees, wooden decks/fencing and buildings.
- Do not attempt to move the unit whilst it is in use.
- Use BBQ/oven mitts at all times, as the surfaces will become hot.
- The use of abrasive cleaners or sharp objects will damage the coatings.
- Use extreme caution when adding charcoal or wood.
- Do not use instant lighting charcoal, or flammable liquids. We recommend using good quality, natural, lumpwood charcoal or charcoal briquettes.
- Ensure the unit is shut down by closing all doors and vents after cooking.
- Use common sense and caution when using this smoker.

Warranty

For two years from date of purchase, Mac's BBQ Ltd warrants this charcoal smoker against defects due to bad workmanship or faulty materials to the original purchaser. To obtain repair or replacement under the terms of this warranty, please email Customer Care info@macsbbq.com for complete details. Mac's BBQ Limited's obligations under this warranty are limited to the following guidelines.

- The warranty does not cover smokers that have been altered or damaged due to: normal wear, rust, abuse, improper maintenance, improper use, disassembly of parts and/or attempted repair by anyone other than an authorized employee or agent of Mac's BBQ Ltd.
- This warranty does not cover surface scratches or heat damage to the finish, which is considered normal wear.
- Mac's BBQ Ltd may elect to repair or replace damaged units covered by the terms of this warranty.
- The warranty extends to the original purchaser only and is not transferable or assignable to subsequent purchasers.

Except as stated above, Mac's BBQ Ltd makes no other express warranty. The implied warranties of merchantability and fitness for a particular purpose are limited in duration to two years from the date of purchase.

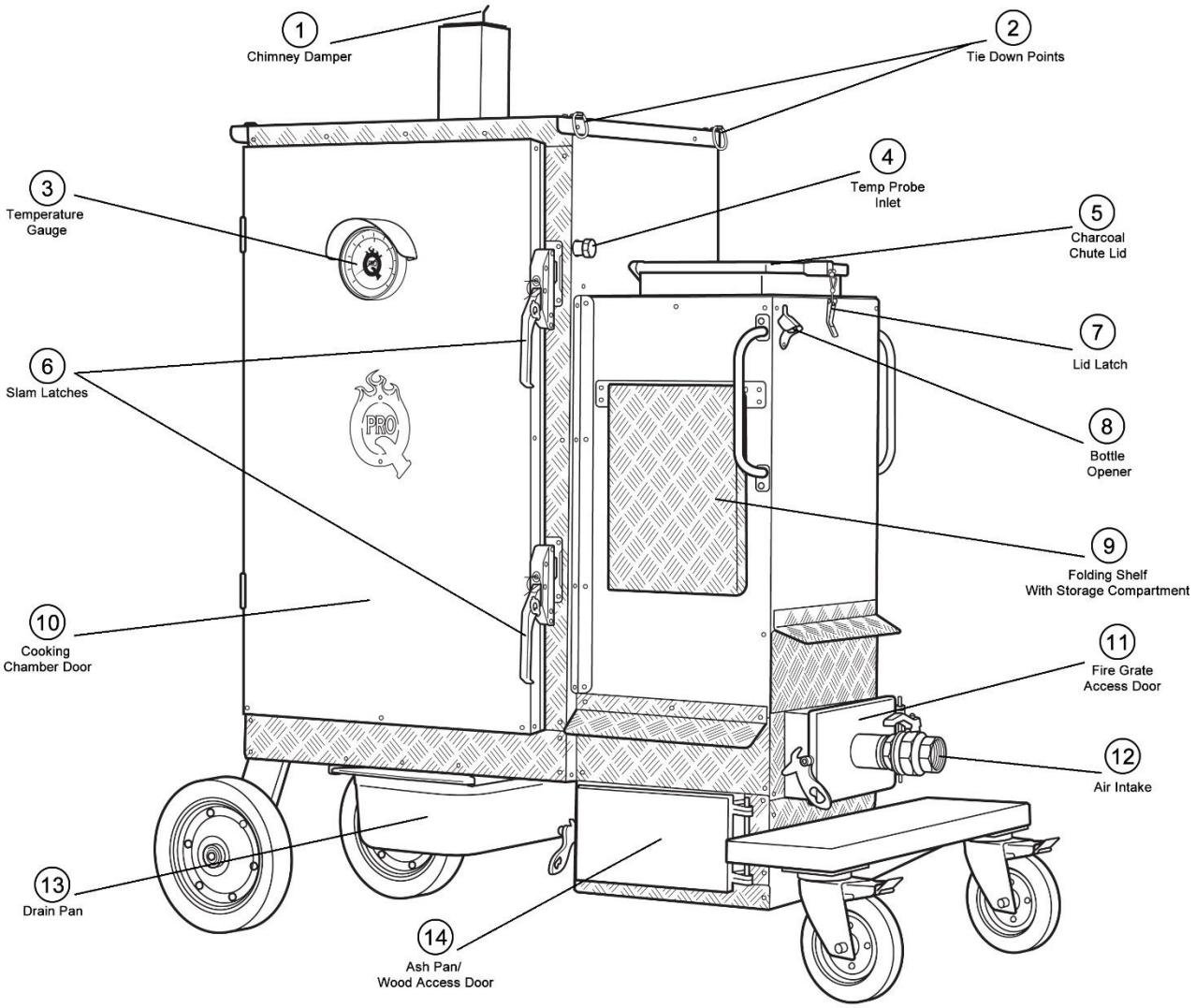

1. Chimney Damper – This adjustable vent is used to control the air/ smoke exiting the smoker.
2. Tie Down Points – The ProQ® GFC series smokers are provided with 4 strategically positioned loops to secure the unit during transport.
3. Temperature Gauge – This highly visible (5” diameter) gauge lets you keep an eye on the cooking temperature, it is also possible to calibrate this.
4. Temp Probe Inlet – Allows for up to 8 probe wires to be fed through to the cooking chamber easily and with minimal leakage.
5. Charcoal Chute Lid – Open this to fill or top up with charcoal. The Charcoal Chute holds 12 – 16Kgs of Lumpwood charcoal.
6. Slam Latches – Our door latches are sturdy and lockable.
7. Lid Latch – This latch ensures an airtight seal and may need to be adjusted once the fabric seal “beds in”.
8. Bottle Opener – Essential for opening refreshments to keep the Pitmaster operating.
9. Folding Side Shelf – Provides extra working space and also includes a basin (GN ½) which comes in handy for storing glazes, rubs, sauces, cloths or anything else you may need.
10. Cooking Chamber Door – Access to the cooking chamber.
11. Fire Grate Access Door – This fire can be lit or re-lit through this door, it also enables the fire grate to be removed for cleaning purposes.
12. Air Intake – A 2-inch Ball Valve allows accurate control of airflow. Also suitable for mounting a forced air system, such as the BBQ Guru®.
13. Drip Pan – Used when cleaning the main cooking chamber, all the waste falls through the drain plug and into this large, removable pan.
14. Ash Pan and Wood Access Door – This separate door enables the excess ash to be removed without disturbing the cooking process. Wood chunks are placed directly in the ash pan to reduce flaming wood and encourage a smouldering smoke. This door can also be used to accelerate start up if required (open the chimney damper fully and close the air intake, when you reach the desired temp, shut the door and re-open the air intake.)

Seasoning The BBQ Smoker

1. Begin by coating the insides and cooking grates with a high temperature cooking oil, such as sunflower oil, or even lard. We recommend a good quality, cold pressed rapeseed oil.
   TIP: Remove the Heat Baffle (See Diagram below), Grills and Water Pan Tray and coat these separately. Use a wide paint brush and a mixing bowl to apply the oil, or an oil spritzer.

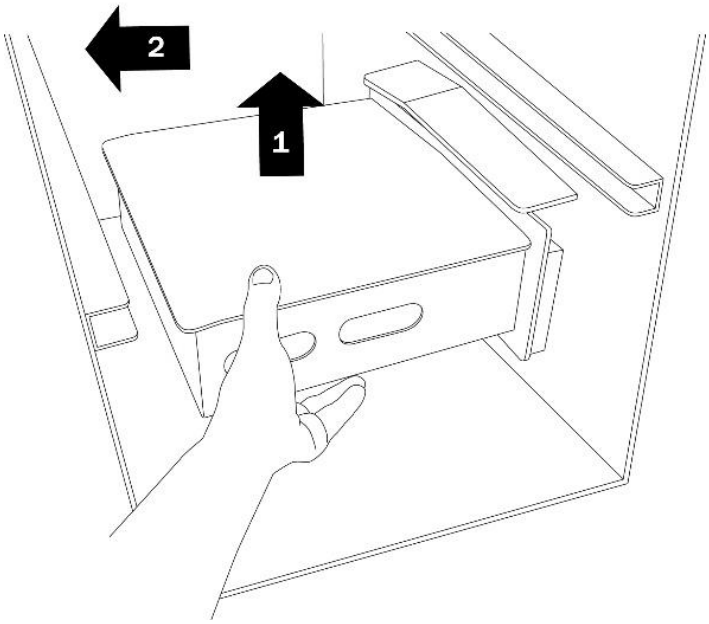

2. Fire up the unit (see lighting instructions below), using around 3-5kg of good quality, lumpwood charcoal. Run at normal cooking temperature (225-300 degrees F) for at least an hour. The heat will cause the oil to bond to the steel. This will help with the preservation and life expectancy of the unit. The normal act of cooking will also help to "season" your BBQ. Your unit will from time to time require a "deep clean" and after this, the seasoning process will need to be redone.

Lighting Up

This is one of the most important tasks, doing this correctly will ensure that you have a safe, long and even burn. Make sure the cooking chamber, cooking grills and heat baffle are clean and free from any fat/ grease build up before use.
Step 1. Fill the Water Pan (15) with water.
TIP: Use hot water as this will help in getting the unit up to temperature a little quicker.

Step 2. Make sure the Air Intake Valve (12) and all doors are closed, **except** the Ash Pan Door (14), and the Chimney Damper which should be fully open. The main Cooking Chamber Door (10) is fitted with Slam Latches and in order to work correctly and seal properly it is essential that the door is firmly "slammed" shut.

Step 3. Get a small amount of good quality lumpwood charcoal going in a chimney starter. Once the charcoal is burning sufficiently well, open the Charcoal Chute Lid (5) and pour in the lit charcoal.

Step 4. Fill up the Charcoal Chute with unlit charcoal, then close and latch the chute door.
TIP: If you have a weed burner / Looftlighter® steps 2 and 3 can be left out as the fire is able to be ignited through the Fire Grate Door (11).

Step 5. Once the unit is up to normal operating temperature, between 200°F -250°F (95°C – 120°C), close the Ash Pan Door (10) and set the Air Intake Valve (12) to around ¼ of the way open. You may need to adjust this slightly, as different types of charcoal will give different results. The Chimney Damper is usually set at ½ open.
TIP: If you are using a forced air system/ digital controller, such as the BBQ Guru®, the Air Intake Valve (12) and Chimney Damper need to be in the fully open position.

Setting Up The Cook

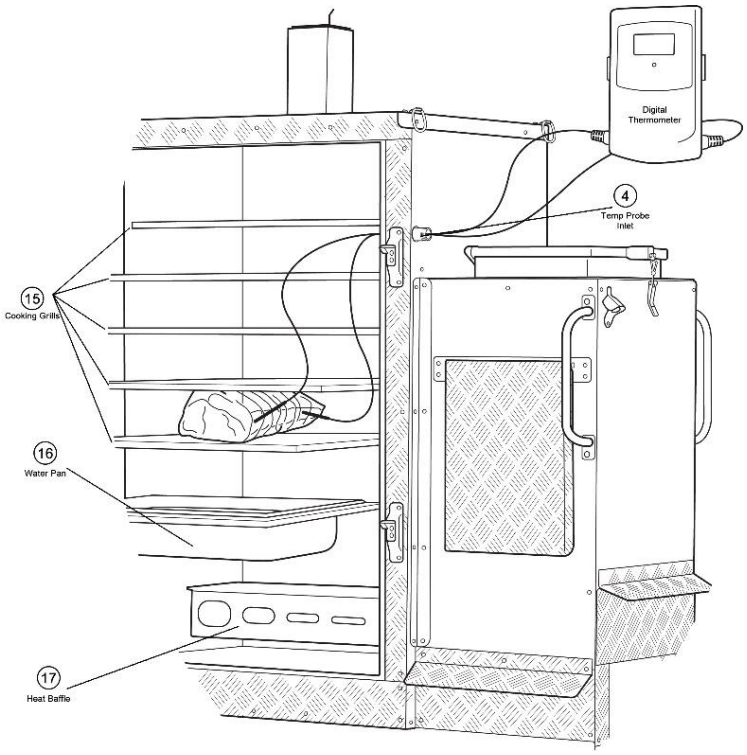

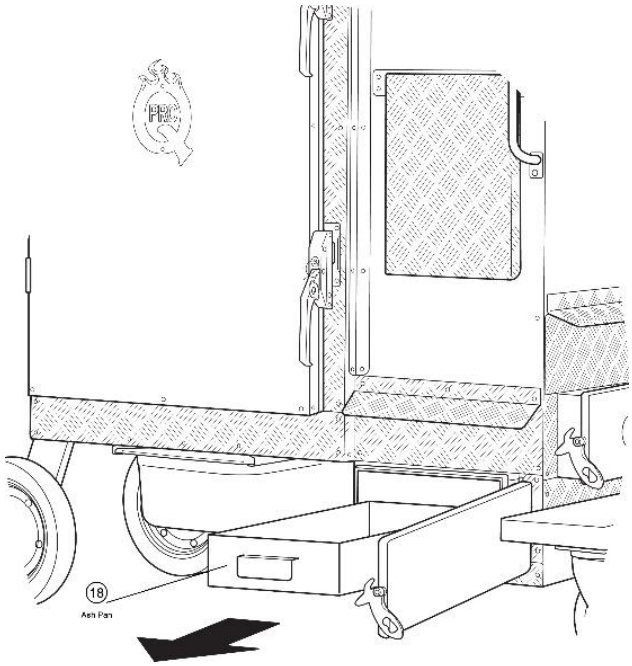

Important Safety Information

Do! – Make sure the cooking chamber, cooking grills (15) and heat baffle (17) are clean and free from any fat or grease build up, before use.
Do Not! – Open the Charcoal Chute Lid (5) for extended periods of time. Open it briefly, then close it once the charcoal has been topped up.
Do Not! – Open the Cooking Chamber Door (10) whilst the Charcoal Chute Lid (5) is open, as this can cause a sudden influx of air (oxygen) which can cause a major flare up
Do Not! – Open the fire Grate Door (11) whilst the Cooking Chamber Door (10) is open, as this can cause a sudden influx of air (oxygen) which can cause a major flare up

ProQ® Gravity Feed Smokers usually take around 40 minutes to reach 200°F -250°F (95°C – 120°C) from the initial lighting up. Once reached, they maintain the temperature (with very little, or no adjustment) for up to 30 hours on a single load of good quality BBQ Charcoal.
TIP: Use the time you are waiting for the Smoker to reach temperature to prepare the food.
Please remember to use good quality BBQ/ Oven Mitts, when handling the smoker, as all internal surfaces are now hot.

Step 1. Open the Cooking Chamber Door (10) and place food on the cooking grills.

Step 2. Feed the digital thermometer probe wires through the Temp Probe Inlet (4).

Step 3. Close the Cooking Chamber Door (10) by slamming it shut and let the unit come back up to temperature (this usually takes no longer than 10 – 15 minutes).

Step 4. Open the Ash Pan and Wood Access Door (14), pull out the Ash Pan (18) and place a couple of “fist sized” chunks of smoking wood in to the Ash Pan (18). Close the door.
TIP: Use smoke to flavour the food as you would a spice or seasoning…Different varieties of wood impart different flavours.

Folding Shelf Operation

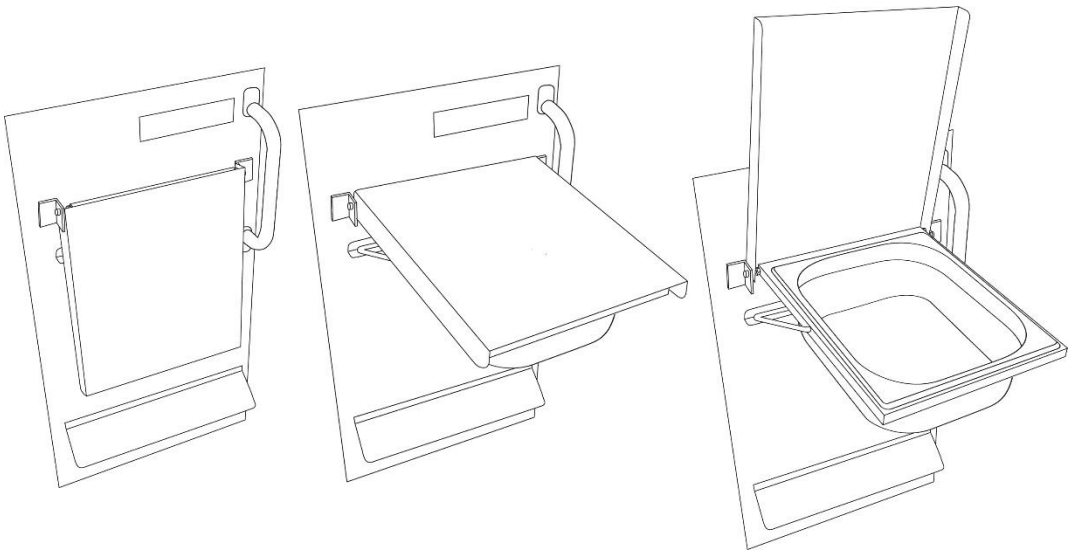

Cleaning and Maintenance

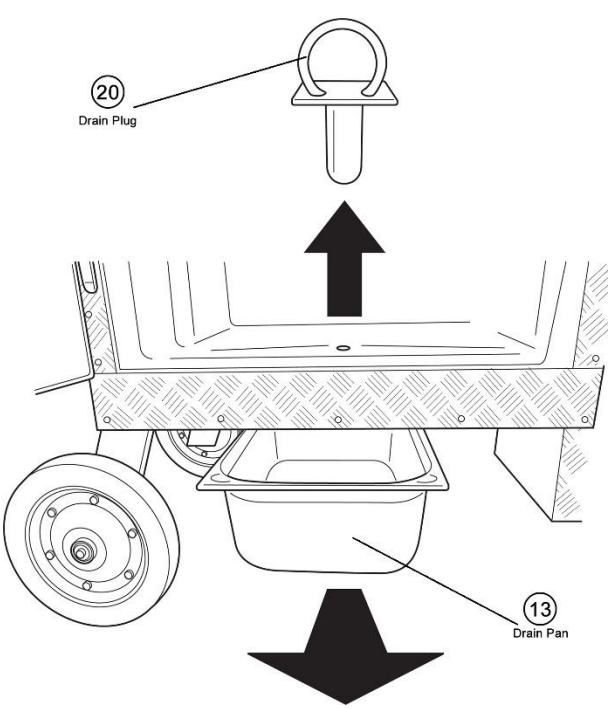

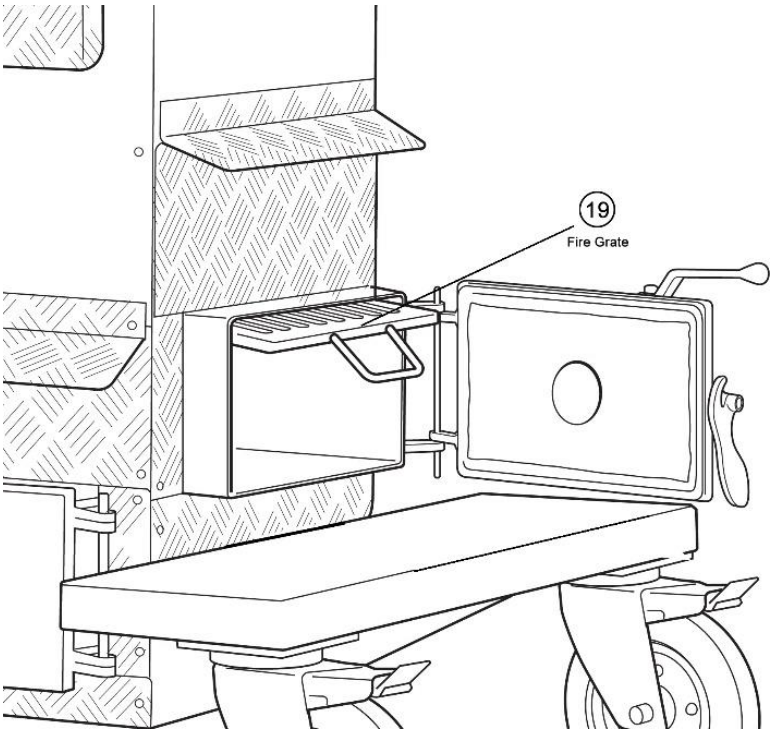

As with any type of cooking equipment, ProQ® Gravity Feed Smokers will require periodic cleaning and maintenance to keep it in perfect working order. After extinguishing the fire, allow the smoker to cool completely and then follow the instructions below:

Step 1. - Remove all the ash from the Ash Pan (18) and allow all remaining charcoal in the Charcoal Chute, to drop down into the Ash Pan (18) by sliding out the Fire Grate (19). Place a suitable container below the Ash Pan and Wood Access Door (14) and scrape the used charcoal into this. Put the charcoal aside, as it can be used again. Brush down all surfaces to remove any excess ash, or small bits of charcoal.

Step 2. Remove all the Cooking Grills (15) and the Heat Baffle (17), these can be cleaned separately.

Step 3. – Remove the Drain Plug (20) located in the bottom of the cooking chamber, then thoroughly wash all surfaces inside the cooking chamber. The Drain Pan (13) can then be removed allowing for easy disposal of the waste material.
TIP: Please remember to replace the Drain Plug (20) once cleaning is completed, failure to do so will affect the airflow within the cooking chamber, resulting in erratic temperature control.

©2016 Mac's BBQ Ltd